rhombus

DR20 Door Reader

User Manual

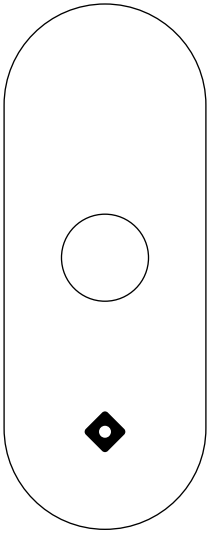

Revision D 250715

Contents

System Overview	04
Mounting Instructions	05
Recommended Wiring	06
Operation	07
Registration	08
Specifications	08
Troubleshooting	09
Appendix	10

Date	Revision	Notes
9/22/2023	A	Initial Release
7/15/2025	D	Maximum power consumption update

Service and installation should only be performed by trained personnel.

WARNING messages will be fully boxed as shown here. Failing to follow instruction may result in damage to the DR20 or other connected components.

UL 294 Compliance

The DR20 Door Reader is intended for indoor operation.

The equipment is defined for these performance levels:
- Attack Level: Level I
- Endurance Level: Level I
- Line Security Level: Level I
- Standby Power Level: Level I

CAN/ULC-60839-11-1 Grade assignment:
- Grade 1

Only use with Power Sourcing Equipment certified by UL 62368-1 (compliant with LPS), or by UL294 (Power-Limited Class 2).

FCC Compliance Statement
This equipment has been tested and found to comply with the limits for a Class A digital device, pursuant to part 15 of the FCC Rules. These limits are designed to provide reasonable protection against harmful interference when the equipment is operated in a commercial environment. This equipment generates, uses, and can radiate radio frequency energy and, if not installed and used in accordance with the instruction manual, may cause harmful interference to radio communications. Operation of this equipment in a residential area is likely to cause harmful interference in which case the user will be required to correct the interference at his own expense.

IC Compliance Statement
This device complies with Industry Canada's license-exempt RSSs. Operation is subject to the following two conditions:
(1) This device may not cause interference; and
(2) This device must accept any interference, including interference that may cause undesired operation of the device. The device has been evaluated to meet general RF exposure requirement. The device can be used in portable exposure condition without restriction.

Le présent appareil est conforme aux CNR d'Industrie Canada applicables aux appareils radio exempts de licence. L'exploitation est autorisée aux deux conditions suivantes:
(1) L'appareil ne doit pas produire de brouillage, et
(2) l'utiliateur de l'appareil doit accepter tout brouillage radioélectrique subi, même si le brouillage est susceptible d'en compromettre le fonctionnement L'appareil a été évalué pour répondre aux exigences générales en matière d'exposition aux RF. L'appareil peut être utilisé en condition d'exposition portable sans restriction.

DR20 Overview

Quickly access your spaces by card, mobile app, or wave-to-unlock gestures with the DR20 Door Reader — a modern, touchless, and reliable smart reader.

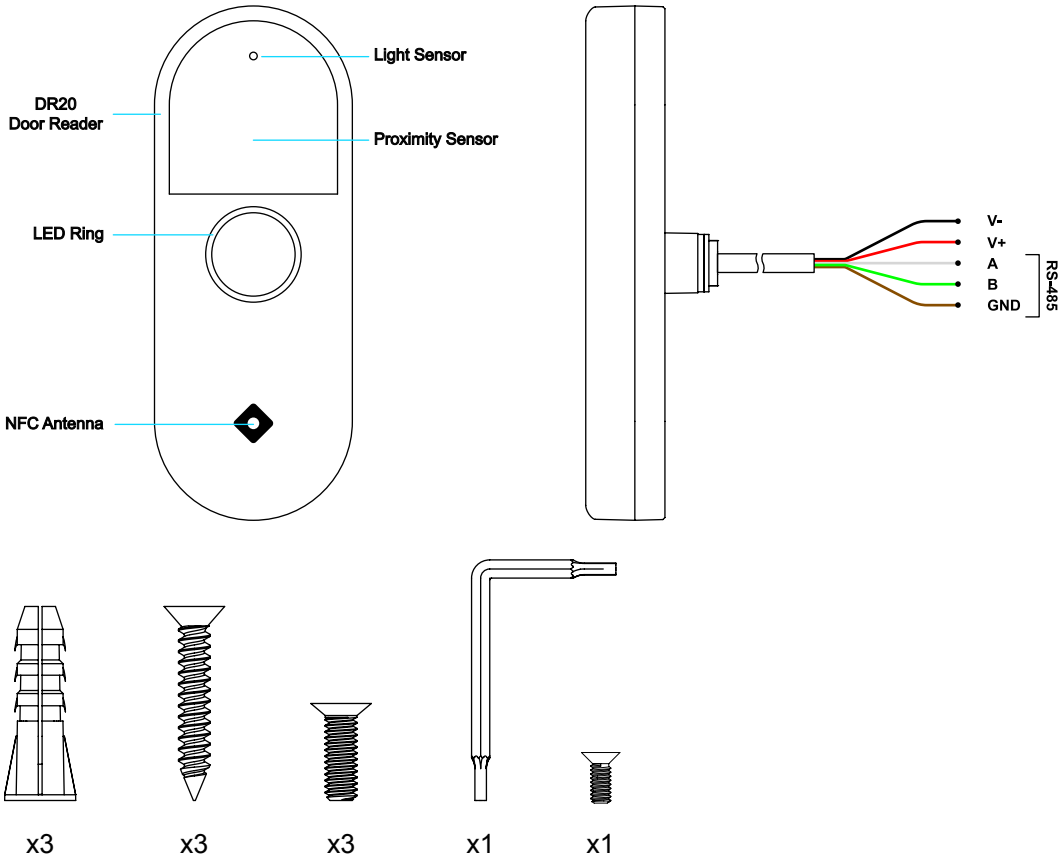

Included in the box:

- DR20 Door Reader
- (2) Wall anchors
- (2) #8 FH wall screws
- (2) 8-32 outlet box screws
- (1) T6 Torx Key
- (1) Extra T6 security screw

Tools You'll Need:

- Phillips #2 screwdriver
- Pen or pencil for marking drill locations
- Power drill and 1/4" drill bit for wall anchors or 1/8" drill bit for screw pilot 1
- 1-3/8" Hole Saw

Mounting the DR20

STEP 1

To install, pre-drill pilot holes into the desired mounting surface in accordance with the mounting specifications provided (see Appendix). Note that a 3/16" pilot hole is required if using the wall anchors.

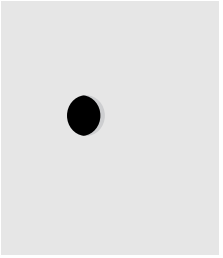

STEP 2

Remove the mounting bracket from the reader by unscrewing the T6 screw at the bottom of the device.

Fasten the mounting bracket to the surface using the included wall screws and ensure that the arrow symbol on the bracket is pointing up.

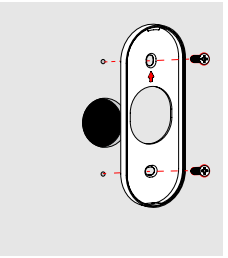

STEP 3

After wiring is completed, pass the DR20 cables through the hole and slide the reader into the mounting bracket.

Ensure that the tab at the top of the mounting bracket is inserted into the top slot of the DR20.

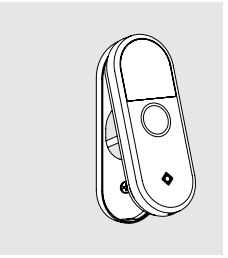

STEP 4

While holding the DR20 in place, insert and tighten the T6 screw back into the bottom of the bracket using the torx key provided.

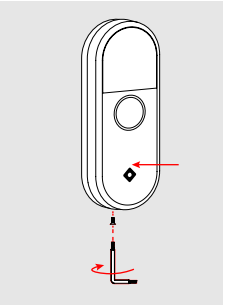

Recommended Wiring

Wiring methods used shall be in accordance with the National Electrical Code, ANSI/NFPA 70.

All wiring of the DR20 should be performed prior to connecting power. Power should be removed before attempting to service the DR20 or any of its connected devices.

WARNING: Failure to remove power prior to servicing the DR20 may result in damage to connected devices.

Wire Type and Size

	Wire Type	Twisted Pair	Shielded	Minimum Size	Maximum Length
Reader Power	Solid or Stranded	—	Yes	18 AWG	300 ft
Reader Data (RS-485)	Solid or Stranded	Yes	Yes	24 AWG	300 ft

DR20 is compatible with the Rhombus DC20 Door Controller and communicates using OSDP protocol over RS-485. Connect the [A], [B] and [GND] lines of the DR20 to the corresponding terminals in the DC20.

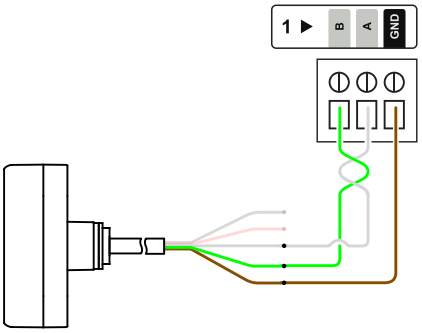

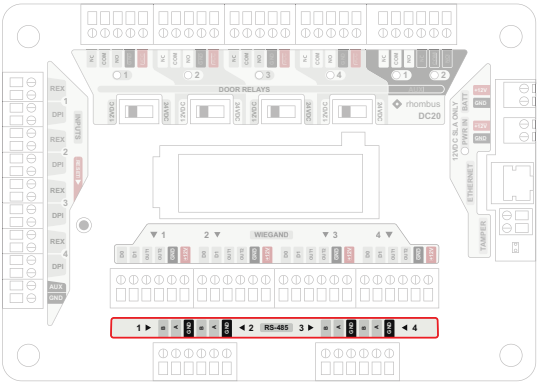

Power to the reader can be supplied directly by the 12VDC power supply in the "WIEGAND" section of the DC20 Door Controller. Alternatively, an external power supply can be used. Note that DR20 requires 8-28VDC with a maximum power of 5.97W. Refer to Recommended Wire Type and Size table above for more wiring detail.

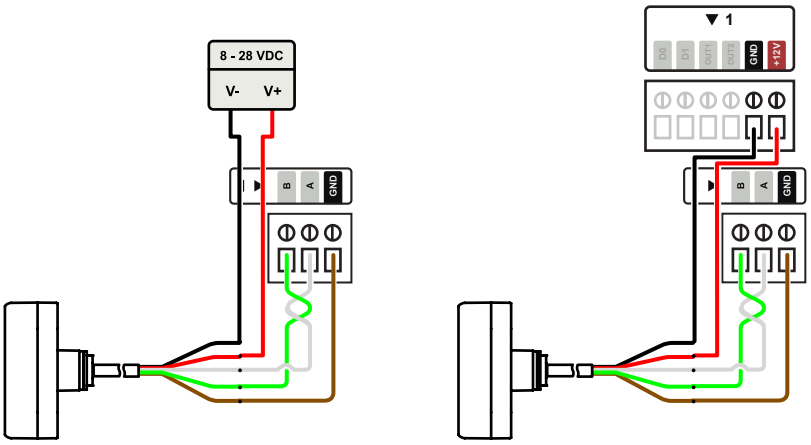

Operation

Proximity Sensor

The DR20 proximity sensor allows for touch-free access using Bluetooth if set-up on the mobile app.

Accepted Credentials

DR20 is compatible with most NFC card types including mobile NFC for iPhone(R) and Android(R) devices. DR20 also facilitates Touchless Entry with your mobile device's Bluetooth, Location, and other onboard services.

Offline Mode

During a network disconnection, Access Control functionality will be preserved, however, user grants and schedules cannot be updated. Once the network connection has been restored to the controller, all alerts, movements, and access control configurations will be updated automatically.

Registration

Getting Started

To get started, scan the QR code provided with the DR20 or visit www.rhombus.com/setup/dr20

Specifications

General

Dimensions: Mullion 50 mm x 130 mm x 20 mm

[1.97 in x 5.12 in x 0.79 in]

Weight: 0.31kg (0.7lbs)

Mounting: Wood/drywall screws Included

Credential

Frequency: 13.56 MHz

Credential Compatibility: Rhombus Badge, ISO 14443A (CSN), Rhombus Key app

Connectivity/Power

Controller Compatibility: DC20

Input Voltage: 8-28VDC

Power Consumption MAX: 5.97W

Environmental

Operating Temperature: -40˚C to 50˚C [-40˚F to 122˚F]

Operating Humidity: 10%-90% RH

Weather Resistance: IP65

FCC, UL 294, CE, RCM, AUS and NZ Compliant

Troubleshooting

Power Cycling

If the DR20 needs to be power cycled, remove the reader from the mounting bracket and unplug the device from the power source. Leave unplugged for around 30 seconds before reconnecting.

LED Indicators

The DR20 LED will fade from white to "OFF" when initially connecting.

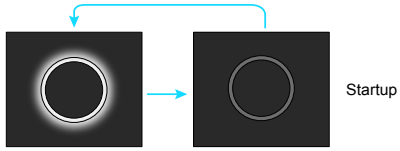

The LED will fade from red to white when the RS485 connection is down or if the reader is not connected to an Access Control Unit (ACU).

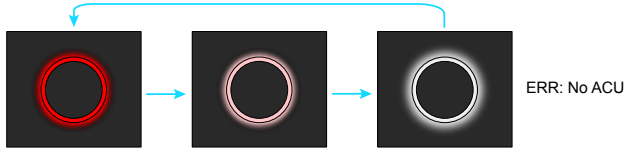

The LED will spin white when awaiting authorization. It will momentarily turn green if access is granted or red if authorization is denied.

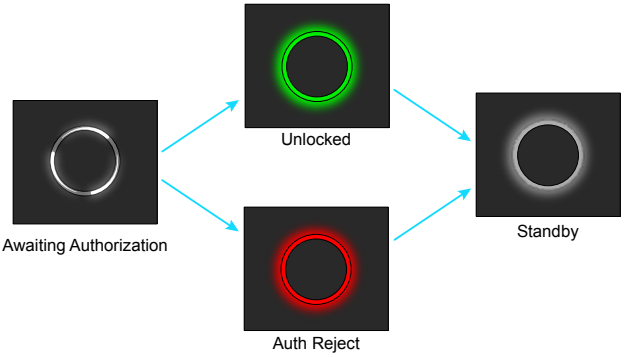

See the appendix for a complete list of DR20 LED Ring patterns.

Appendix

Mounting Dimensions

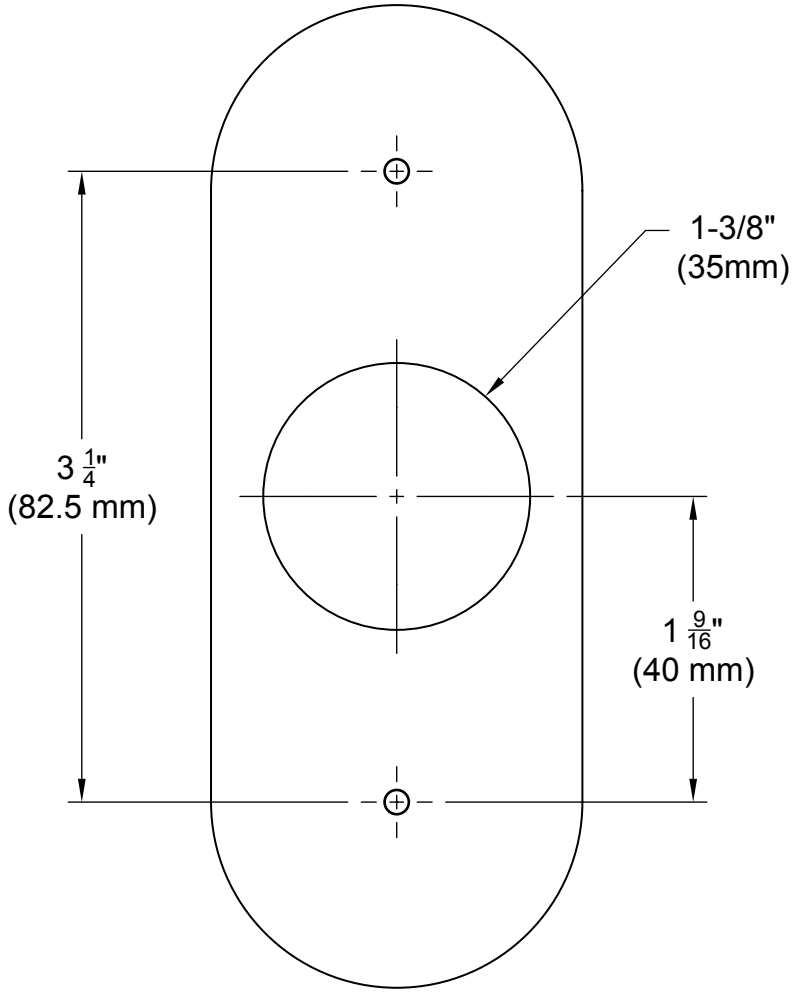

DR20 LED Ring Patterns

Color Pattern	Feedback Name	Feedback Description
White/OFF fade	Starting Up	Initial connection period, not yet fully available.
Blue/OFF fade	Unregistered	-
Red/White fade	ERR: No ACU	RS485 connection is down.
Red/Yellow flash	ERR: Internal	Try again.
Dim white, steady	Await intent	-
Spinning White	Awaiting authorization	-
Solid Green	Unlocked	-
Single Red Flash	Authorization rejected	-
Single Blue/OFF fade	Doorbell pressed	-